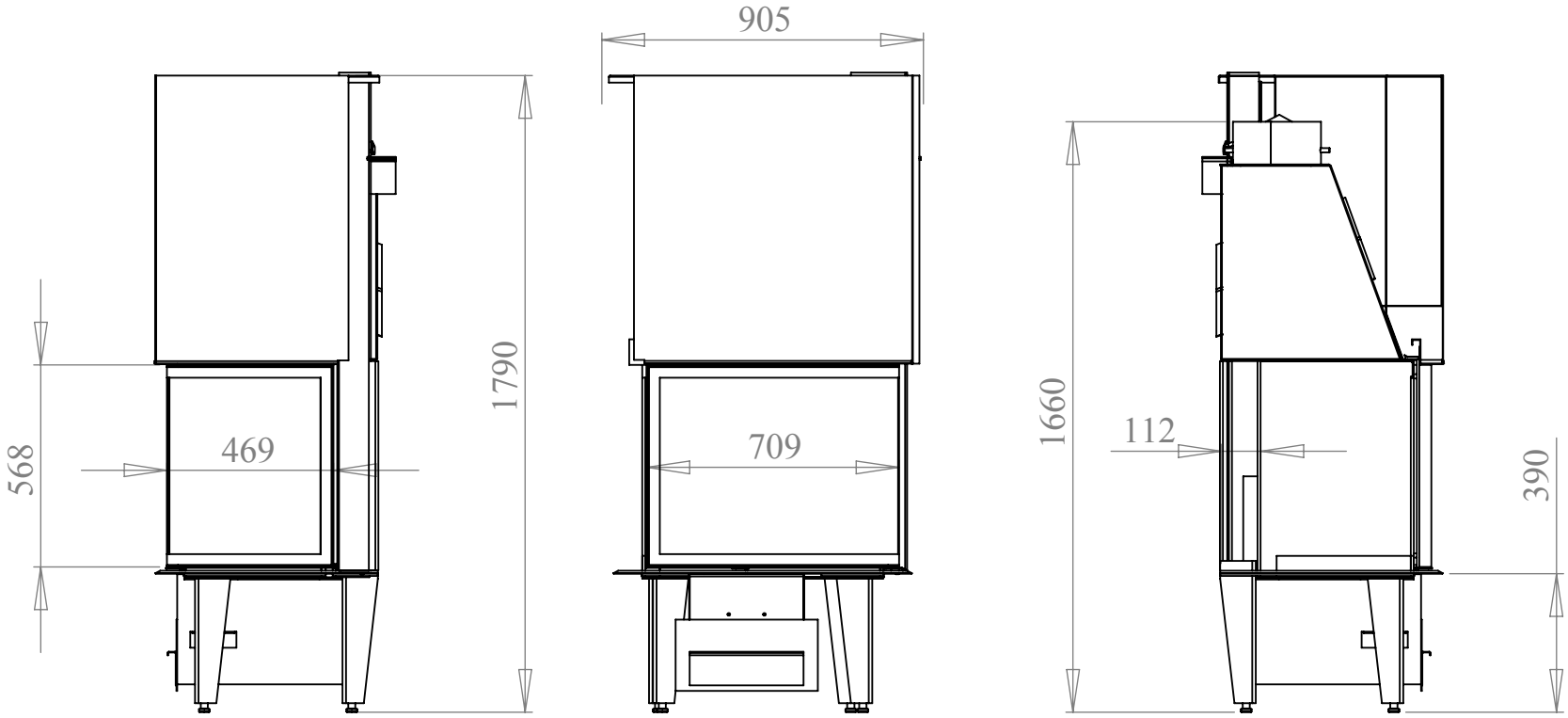
905
1790
568
469
709
1660
112
390

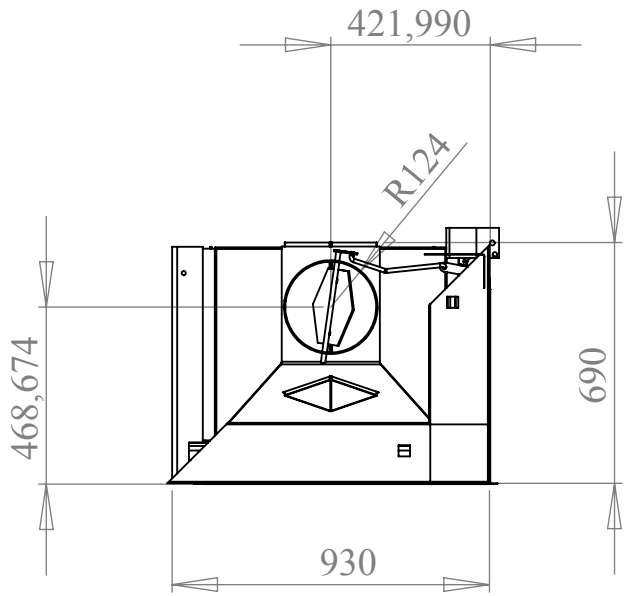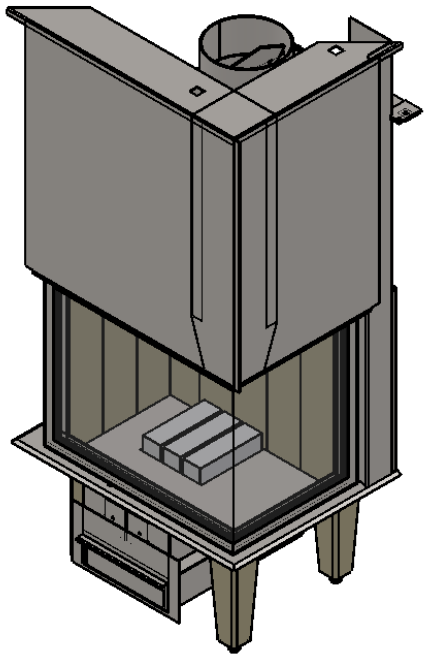
421,990
R124
468,674
690
930